Sales Order: 7344-F	Custom Trash Receptacle	Date: 7.22.15
Item: Custom Trash Receptacle w/ DL-2 Lid	No. TR-1954-30-1G	Scale NTS
Finish: Fir Green Powder Coat & Recycled Plastic Slats	☐ approved ☐ approved as noted ☐ not approved revise as noted	
PHONE 540.342.1548 FAX 540.342.1417 WEB RCLFINC.COM		

RCLF SITE FURNISHINGS

* Corrected -DL2 to -RL Lid. MC 07.23.15

Top View

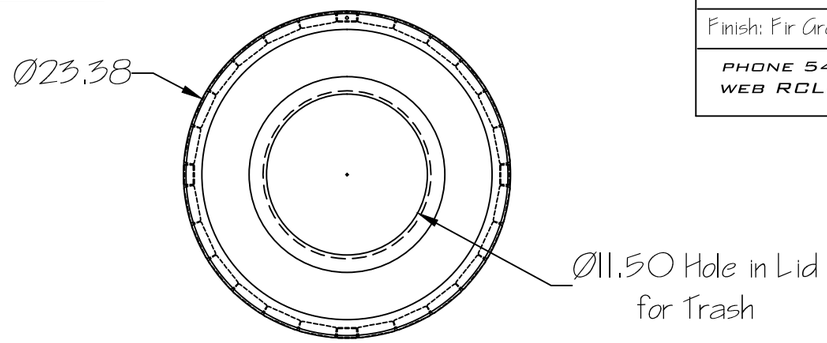

Front View

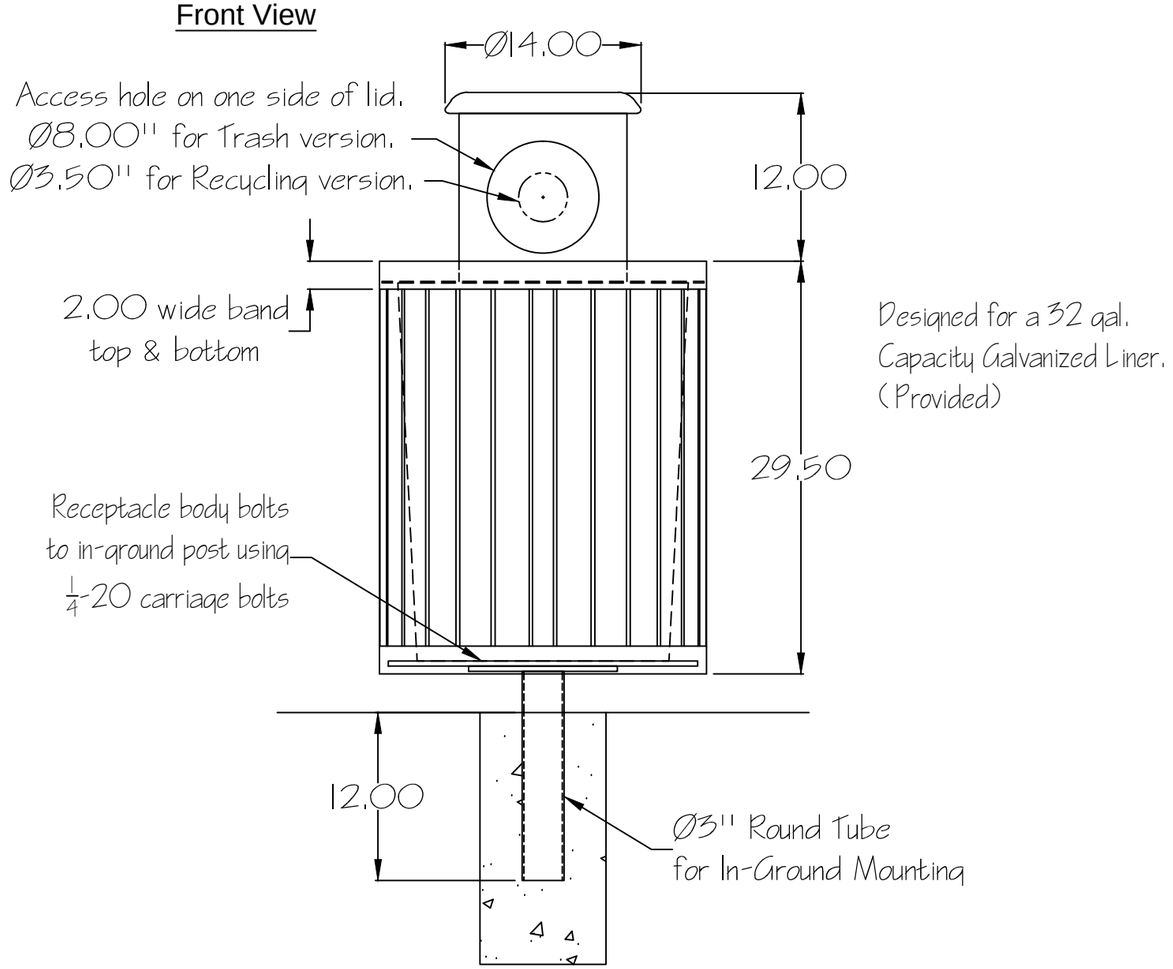

Side View