RF-R-0012 · LITTER, RECYCLING & ASH

Trash Receptacle

BUILT TO ORDER

Every model is a starting point. Modify size, finish, mounting, and branding to suit the site.

CUSTOMIZE

Size	Lengths, depths, and back height built to the dimension you specify.
Finish	Any powder-coat color - 34 standard options, plus custom match.
Mounting	Surface mount, Freestanding / portable.
Branding	Laser-cut logos, plaques, and donor recognition integrated into the piece.

STANDARD CONFIGURATION

Dimensions	Dimensions: 23-1/2"L x 19"W x 38"H

MATERIALS & CONSTRUCTION

- Laser-cut and formed steel, fully welded.
- Fabricated under one roof in Roanoke, Virginia.
- Multi-stage marine-grade powder-coat finish.

ANCHORING & ORDER CODES

Surface mount	**RF-R-0012-SM**
Freestanding / portable	**RF-R-0012-FS**

WARRANTY

Frame warranted against structural defect; powder-coat finish warranted against failure under normal public-realm use. Full terms on request.

POWDER-COAT FINISHES

34 standard colors · custom RAL match available

Black Peel	Black Texture	Cappuccino	Cargo Black	Chocolate Brown
Claret-Violet	Classic Grey	Cobalt Blue	Light Ivory	Fence Red
Fir Green	Green-Blue	Gun Metal	Glossy White	Java
Lemon Yellow	Light Blue	Luna	Mineral Bronze	Nut Brown
Olive Patina	Oxblood	Pastel Turquoise	Poly Silver Vein	Red Letter
Rust	Silver Hammerstone	Safety Yellow	Star Dust	Sulfur Yellow
Traffic Gray	Verdi	Water Blue	White Peel	

(540) 342-1548 · info@rclfinc.com · Buy America (BABA)

Sheet 1 of 2

* added limiting bracket to drawing, added sheet 2_MC - 9.25.19

sales order 10518-F		Custom Ash-Trash Receptacle	Date 9/24/19
item N/A		No. RF-R-0012	Scale NTS
finish	TBD	☐ approved ☐ approved as noted ☐ not approved revise as noted	Drafter MBC
PHONE 540.342.1548 FAX 540.342.1417 WEB RCLFINC.COM			

RCLF SITE FURNISHINGS

Top View

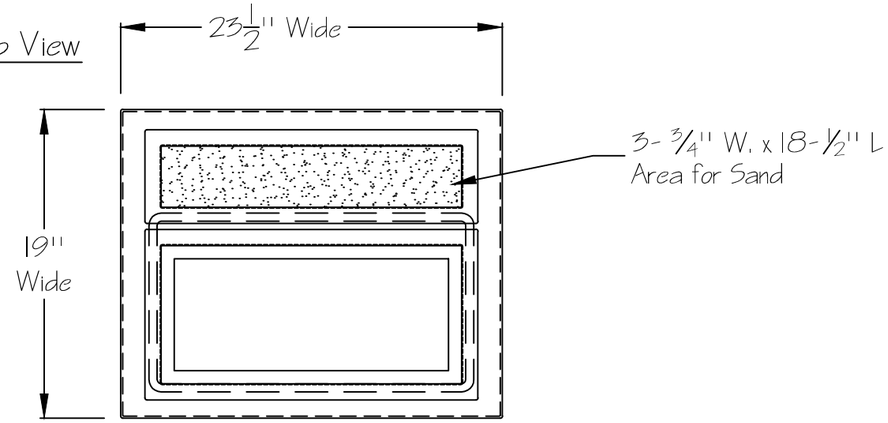

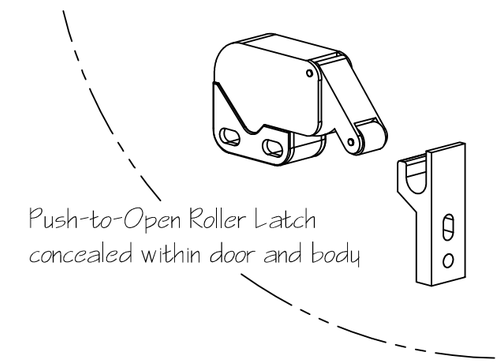

Front View

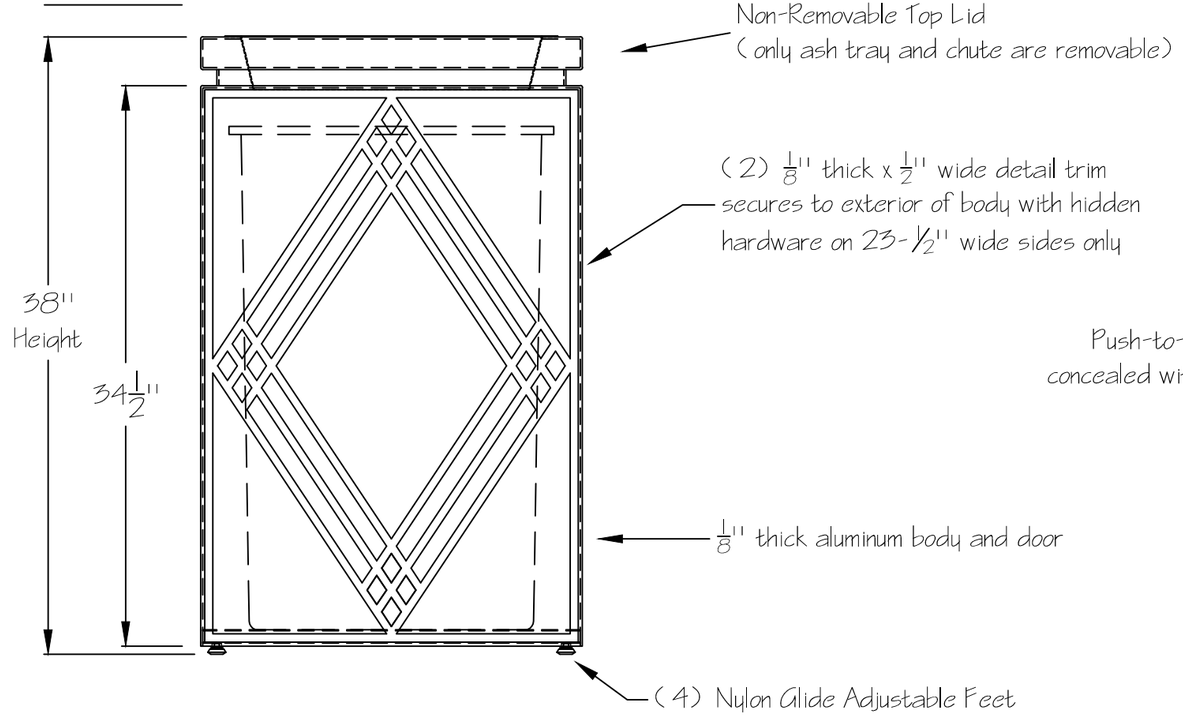
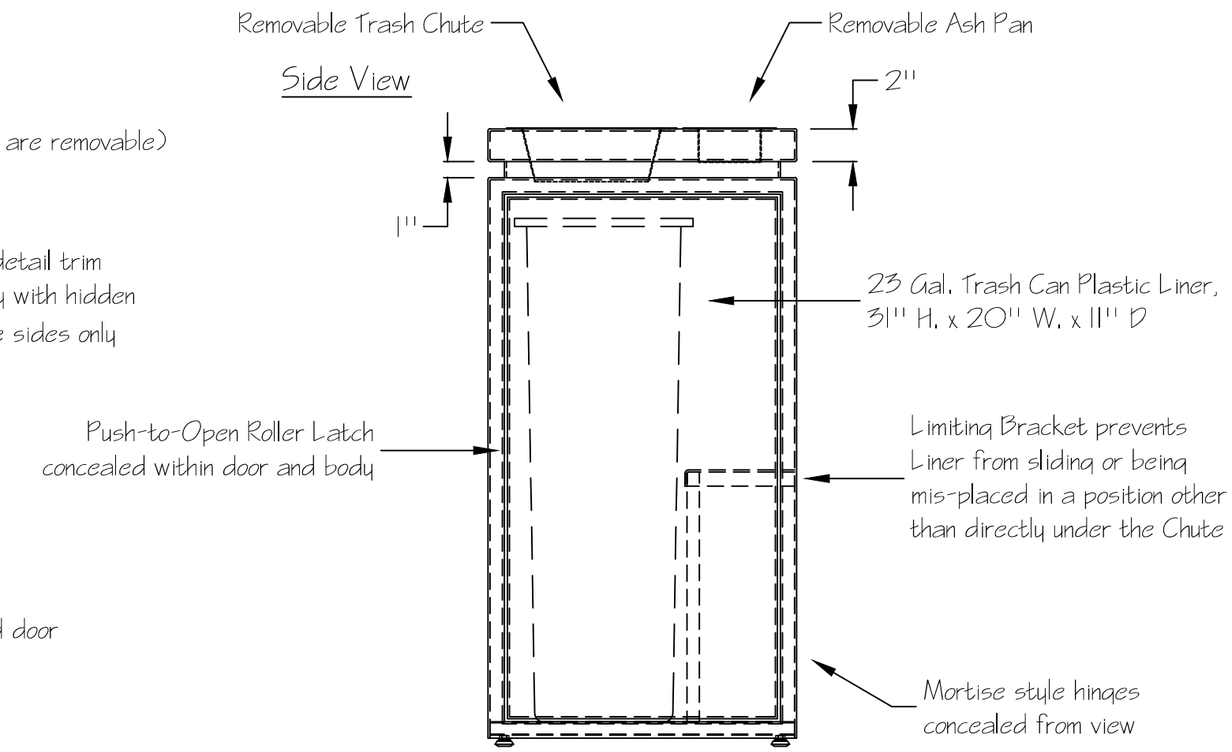
Side View