RF-R-0501-23 · LITTER, RECYCLING & ASH

# Trash Receptacle

**BUILT TO ORDER**

**Every model is a starting point. Modify size, finish, mounting, and branding to suit the site.**

## CUSTOMIZE

| | |
|---|---|
| **Size** | Lengths, depths, and back height built to the dimension you specify. |
| **Finish** | Any powder-coat color - 34 standard options, plus custom match. |
| **Mounting** | Surface mount, Freestanding / portable. |
| **Branding** | Laser-cut logos, plaques, and donor recognition integrated into the piece. |

## STANDARD CONFIGURATION

| | |
|---|---|
| Dimensions | Dimensions: 45" H x 22.5" Square |

## MATERIALS & CONSTRUCTION

- Laser-cut and formed steel, fully welded.
- Fabricated under one roof in Roanoke, Virginia.
- Multi-stage marine-grade powder-coat finish.

## ANCHORING & ORDER CODES

| | |
|---|---|
| Surface mount | **RF-R-0501-23-SM** |
| Freestanding / portable | **RF-R-0501-23-FS** |

## WARRANTY

Frame warranted against structural defect; powder-coat finish warranted against failure under normal public-realm use. Full terms on request.

## POWDER-COAT FINISHES

34 standard colors · custom RAL match available

| | | | | |
|---|---|---|---|---|
| Black Peel | Black Texture | Cappuccino | Cargo Black | Chocolate Brown |
| Claret-Violet | Classic Grey | Cobalt Blue | Light Ivory | Fence Red |
| Fir Green | Green-Blue | Gun Metal | Glossy White | Java |
| Lemon Yellow | Light Blue | Luna | Mineral Bronze | Nut Brown |
| Olive Patina | Oxblood | Pastel Turquoise | Poly Silver Vein | Red Letter |
| Rust | Silver Hammerstone | Safety Yellow | Star Dust | Sulfur Yellow |
| Traffic Gray | Verdi | Water Blue | White Peel | |



(540) 342-1548 · info@rclfinc.com · Buy America (BABA)

| | | |
|---|---|---|
| Sales Order: 13280-F | Custom Trash Receptacle | Date 12.18.23 |
| Item: n/ a | RF-R-0501-32-AT | Scale N.T.S |
| Finish: Powder Primer and Top Coat - Color to be Approved | ☐ approved<br>☐ approved as noted<br>☐ not approved revise as noted | Drafter MC |
| PHONE 540.342.1548 FAX 540.342.1417<br>WEB RCLFINC.COM | | |

RCLF SITE FURNISHINGS

## Top View

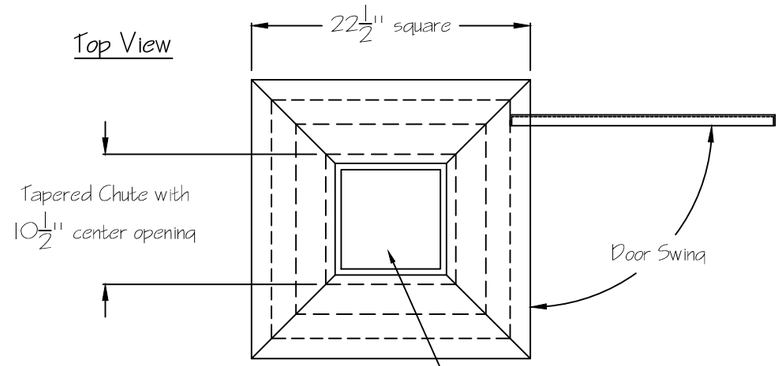


Removable Ash Tray
8" square x 1-1/2" Deep

## Front View

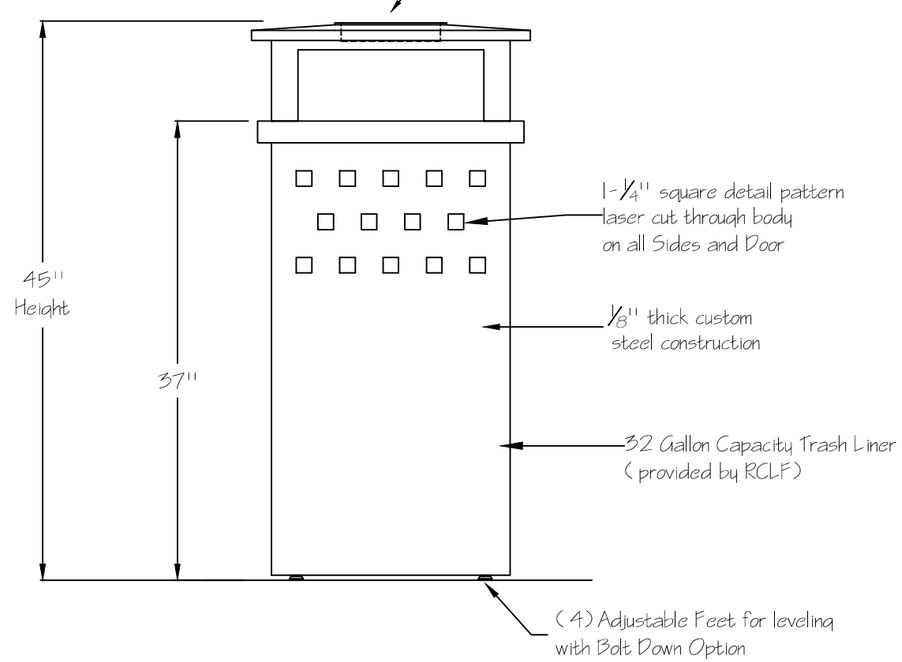

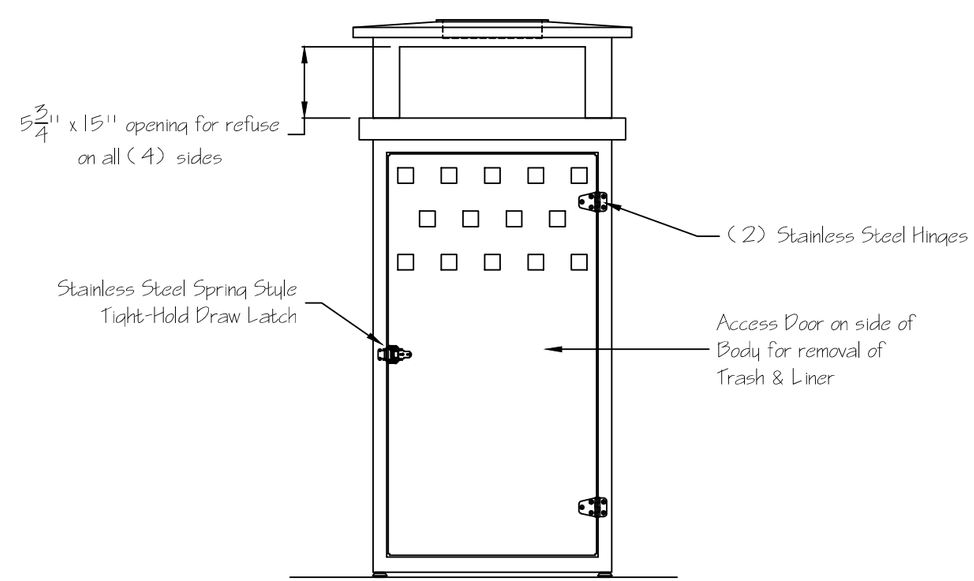
## Side View